www.raider.bg

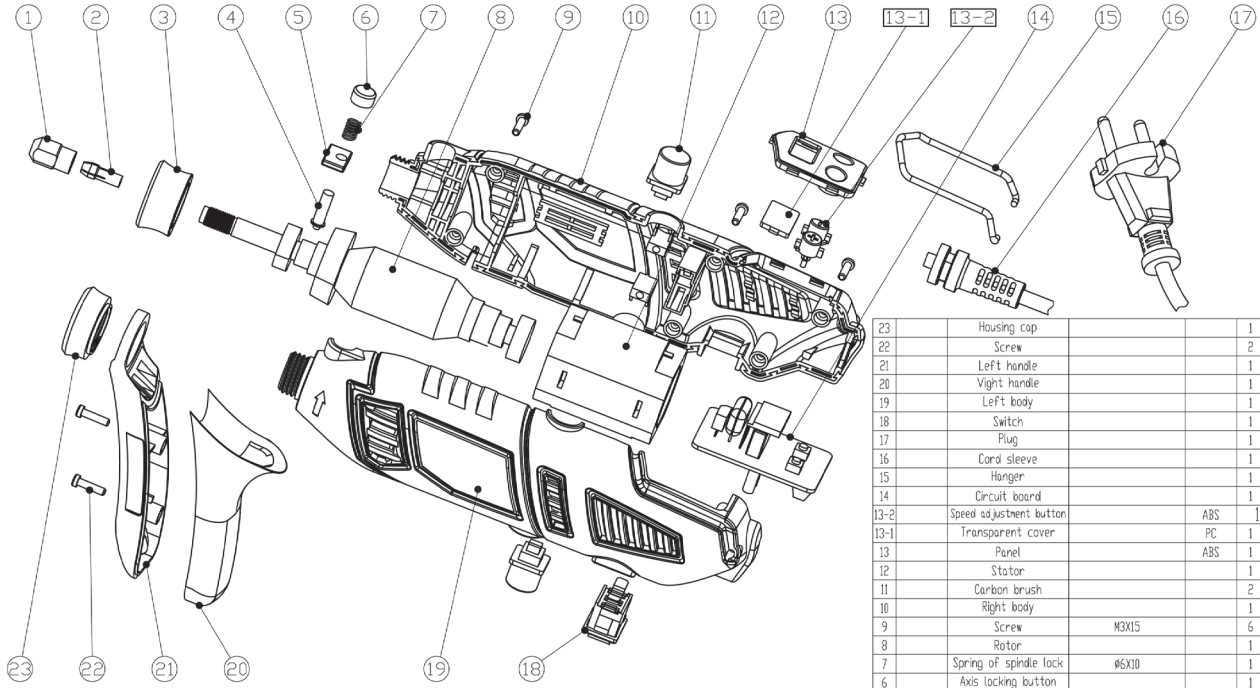


| ITEM | CHINESE | DESCRIPTION | SPECIFICATION | MATERIAL | QTY. | REMARK |
|---|---|---|---|---|---|---|
| 23 | | Housing cap | | | 1 | |
| 22 | | Screw | | | 2 | |
| 21 | | Left handle | | | 1 | |
| 20 | | Vight handle | | | 1 | |
| 19 | | Left body | | | 1 | |
| 18 | | Switch | | | 1 | |
| 17 | | Plug | | | 1 | |
| 16 | | Cord sleeve | | | 1 | |
| 15 | | Hanger | | | 1 | |
| 14 | | Circuit board | | | 1 | |
| 13-2 | | Speed adjustment button | | ABS | 1 | |
| 13-1 | | Transparent cover | | PC | 1 | |
| 13 | | Panel | | ABS | 1 | |
| 12 | | Stator | | | 1 | |
| 11 | | Carbon brush | | | 2 | |
| 10 | | Right body | | | 1 | |
| 9 | | Screw | M3X15 | | 6 | |
| 8 | | Rotor | | | 1 | |
| 7 | | Spring of spindle lock | ø6X10 | | 1 | |
| 6 | | Axis locking button | | | 1 | |
| 5 | | Gasket | | ABS | 1 | |
| 4 | | Spinalle lock button | | | 1 | |
| 3 | | Cap body | | | 1 | |
| 2 | | Collet | | | 1 | |
| 1 | | Collet nut | | | 1 | |

| | | | |
|---|---|---|---|
| 0~5 | 0.03 | 0.05 | 0.10 |
| 6~20 | 0.05 | 0.10 | 0.20 |
| 21~30 | 0.10 | 0.20 | 0.30 |
| 31~100 | 0.20 | 0.30 | 0.40 |
| 101~ | 0.30 | 0.40 | 0.50 |
| ANGULAR | 0.01 | 0.05 | 0.10 |

MM

RD-MG09

0A